SUSPENSION, FRONT SHOCK INTERNALS - Z26NEY99A4/B4/A6/B6 (7046371)

2026 RZR - RZR XP S 1000 ULTIMATE (R01) - Z26NEY99A4/B4/A6/B6

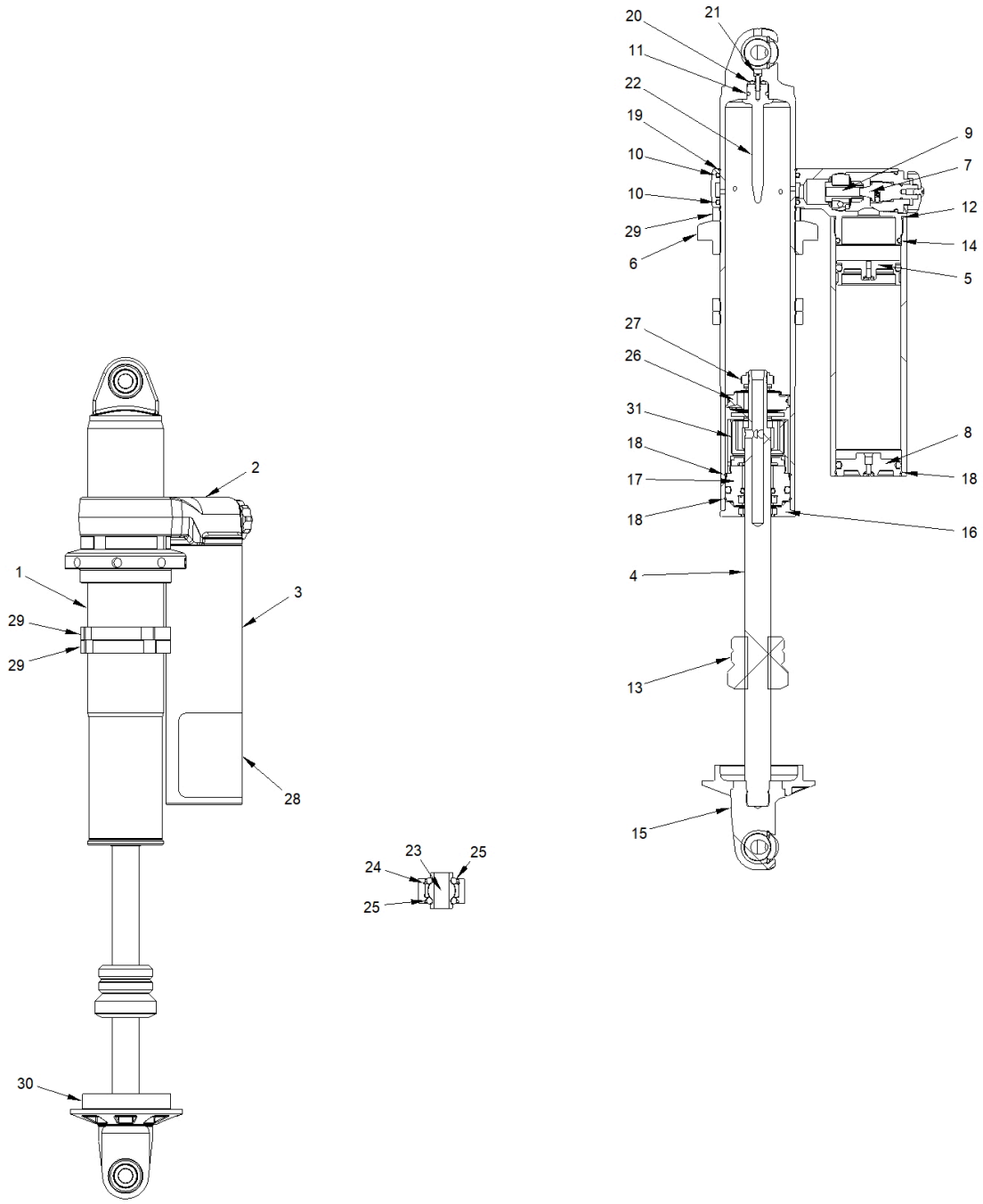

Reference #	*Part#*	*Description*	*Quantity*
	7046371	SHOCK-FRONT,LH [INCLUDES 1-36]	1
	7046372	SHOCK-FRONT,RH [INCLUDES 1-36]	1
1	-------	BODY-SHOCK,2.5",14.98OL,CLR	1
2	-------	2.5 BRIDGE,WER ADJUSTER	1
3	-------	2.5IN 8.5L PB RES CAN WR	1

4	-------	SHAFT-NEEDLE .875 X 14.247L	1
5	-------	RES.PISTON 2.5ON ASM	1
6	-------	2.5IN SPRING CUT(CLEAR)	1
7	-------	ASM-SS RETENTION NUT	1
8	-------	END CAP ASSY-2.5 WIRE RING BUILT IN CHARGE PORT	1
9	-------	VALVE,CHECK ASSEMBLY	1
10	-------	O-RING 2-230	2
11	-------	O-RING2-112	1
12	-------	O-RING2.033	1
13	-------	1.714 BUMP STOP	1
14	-------	O-RING 2-225	1
15	-------	SHAFT LOOP,1.0935 BORE,BRNG STEP,2.93L	1
16	-------	WIPER CAP ASM 2.5 PRESS FIT	1
17	-------	ASM-SEAL HEAD-TOP OUT PISTON	1
18	-------	ID RETAINING RING,2.5"	3
19	-------	OD RETAINING RING,2.5"	1
20	-------	O-RING 2-202	1
21	-------	#8-32X.500 LOW HEAD SCREW	1
22	-------	NEEDLE-PRESS IN,3.235L	1
23	-------	BEARING-SPHRL 12MM,16.8 DEG	2
24	-------	RETAINING RING FOR 1.0625 BORE	2
25	-------	O-RING 2.312	4
26	-------	ASM-PSTN,2.5",7046371	1
27	-------	NUT, FLEXLOC,THIN 5/8-18	1
28	-------	DECAL SHOCK,7046371	1
29	-------	2.5IN CROSSOVER RING/JAM NUT	3
30	1501211	RETAINER-SPRING,2.5"	1
31	-------	CHECKVALVE-3PORT,1.08L,X1X.100	1

Copyright 1996-2026 Polaris Industries U.S.A All rights reserved.